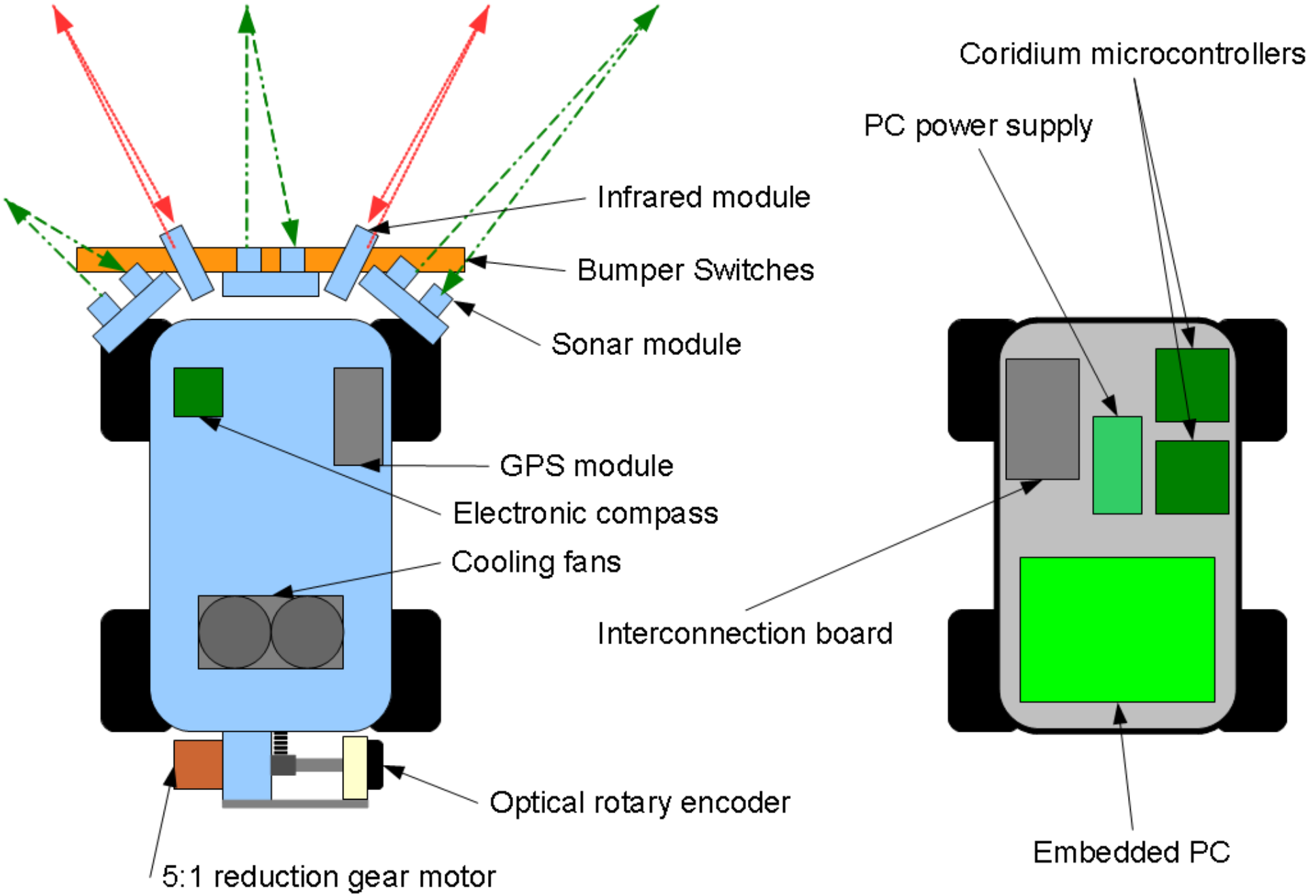
Infrared module
Bumper Switches
Sonar module
GPS module
Electronic compass
Cooling fans
Optical rotary encoder
5:1 reduction gear motor
Coridium microcontrollers
PC power supply
Interconnection board
Embedded PC

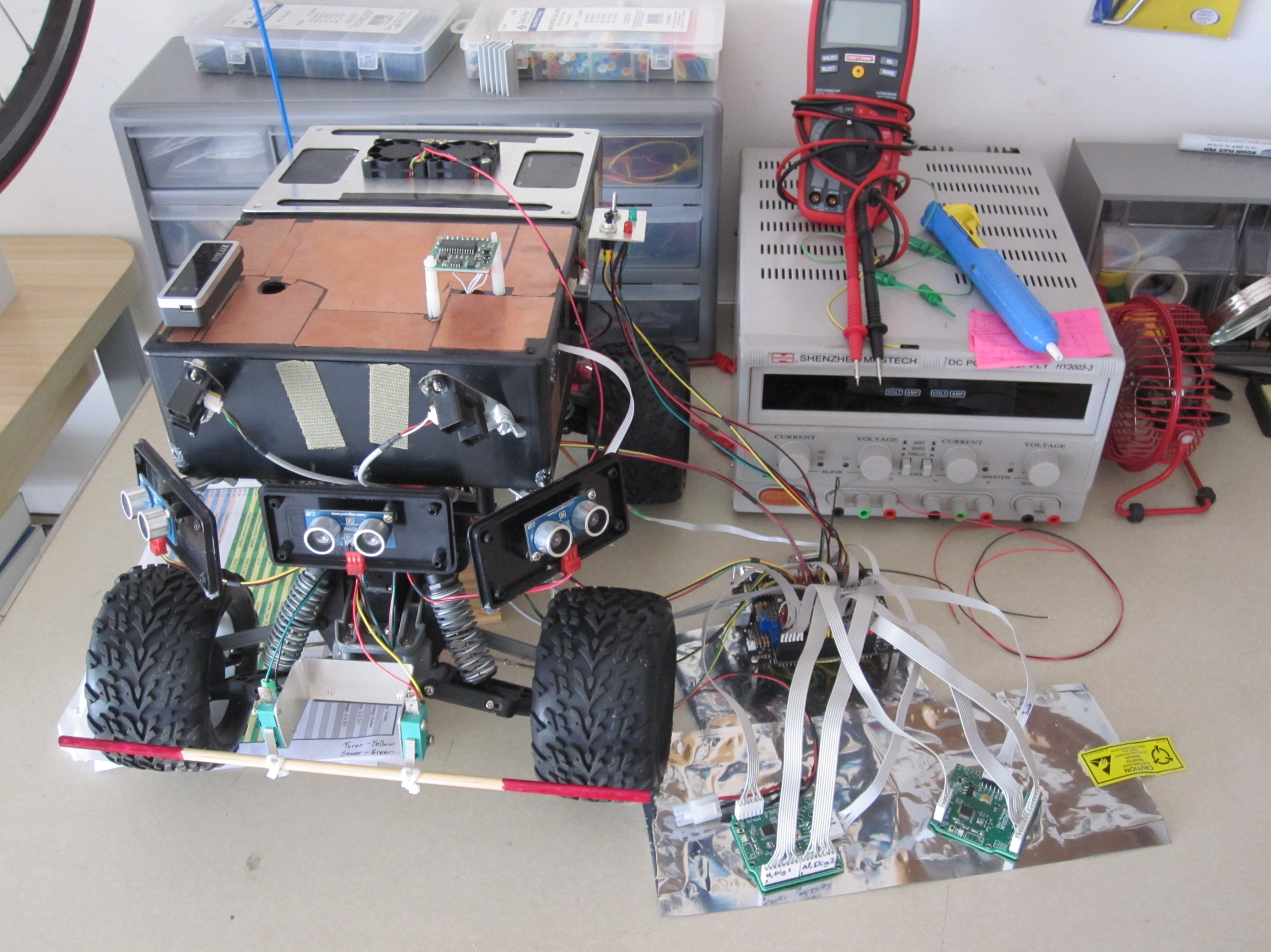
SHENZHEN MASTECH
DC POWER SUPPLY HY3003-3
VOLT AMP
VOLT AMP
CURRENT
VOLTAGE
SLAVE
CURRENT
VOLTAGE
MASTER
Three - Yellow
Seven - Green

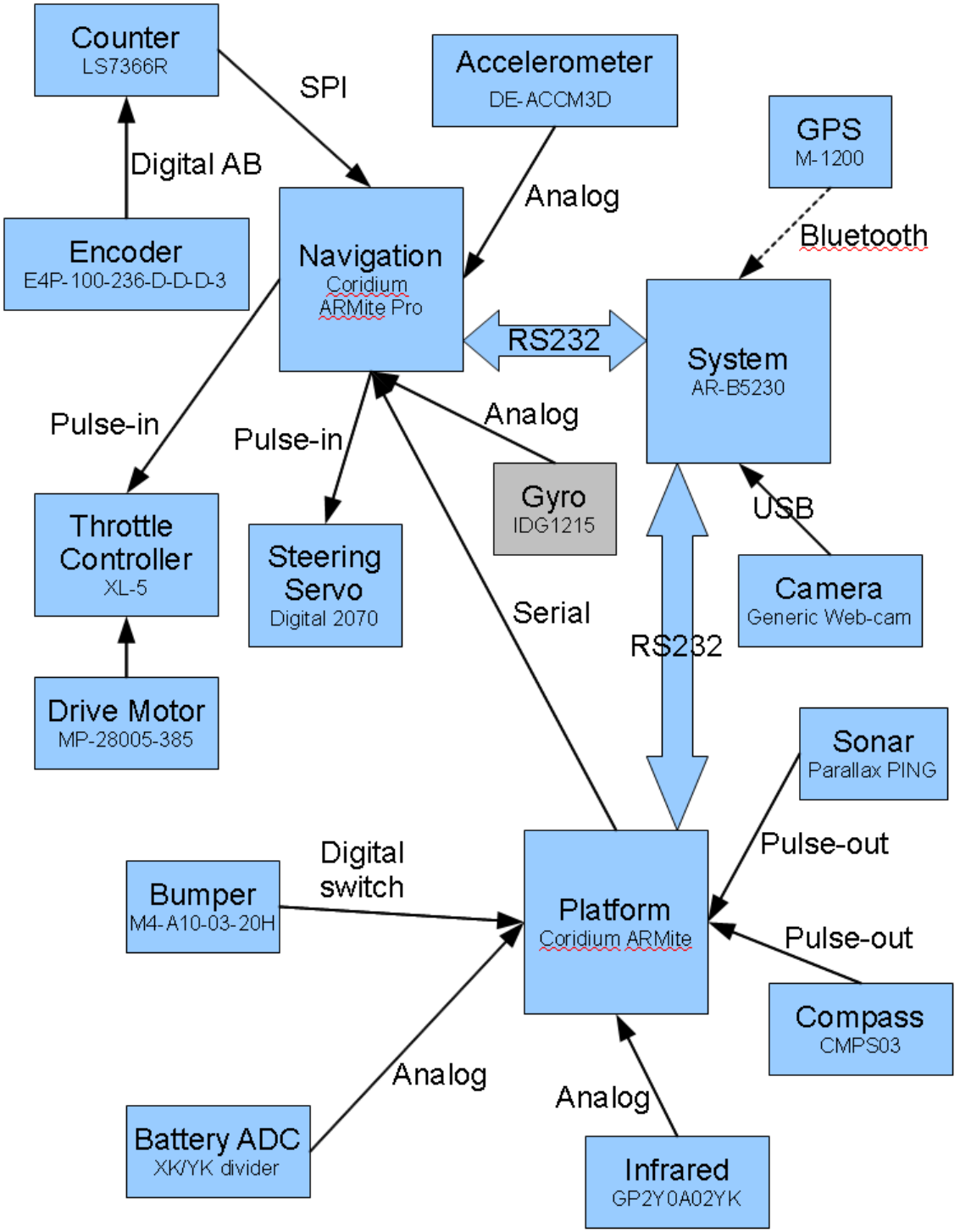
Counter
LS7366R
SPI
Accelerometer
DE-ACCM3D
GPS
M-1200
Digital AB
Analog
Bluetooth
Encoder
E4P-100-236-D-D-D-3
Navigation
Coridium
ARMite Pro
RS232
System
AR-B5230
Pulse-in
Pulse-in
Analog
Gyro
IDG1215
USB
Throttle
Controller
XL-5
Steering
Servo
Digital 2070
Serial
RS232
Camera
Generic Web-cam
Drive Motor
MP-28005-385
Sonar
Parallax PING
Digital
switch
Pulse-out
Bumper
M4-A10-03-20H
Platform
Coridium ARMite
Pulse-out
Compass
CMPS03
Analog
Analog
Battery ADC
XK/YK divider
Infrared
GP2Y0A02YK

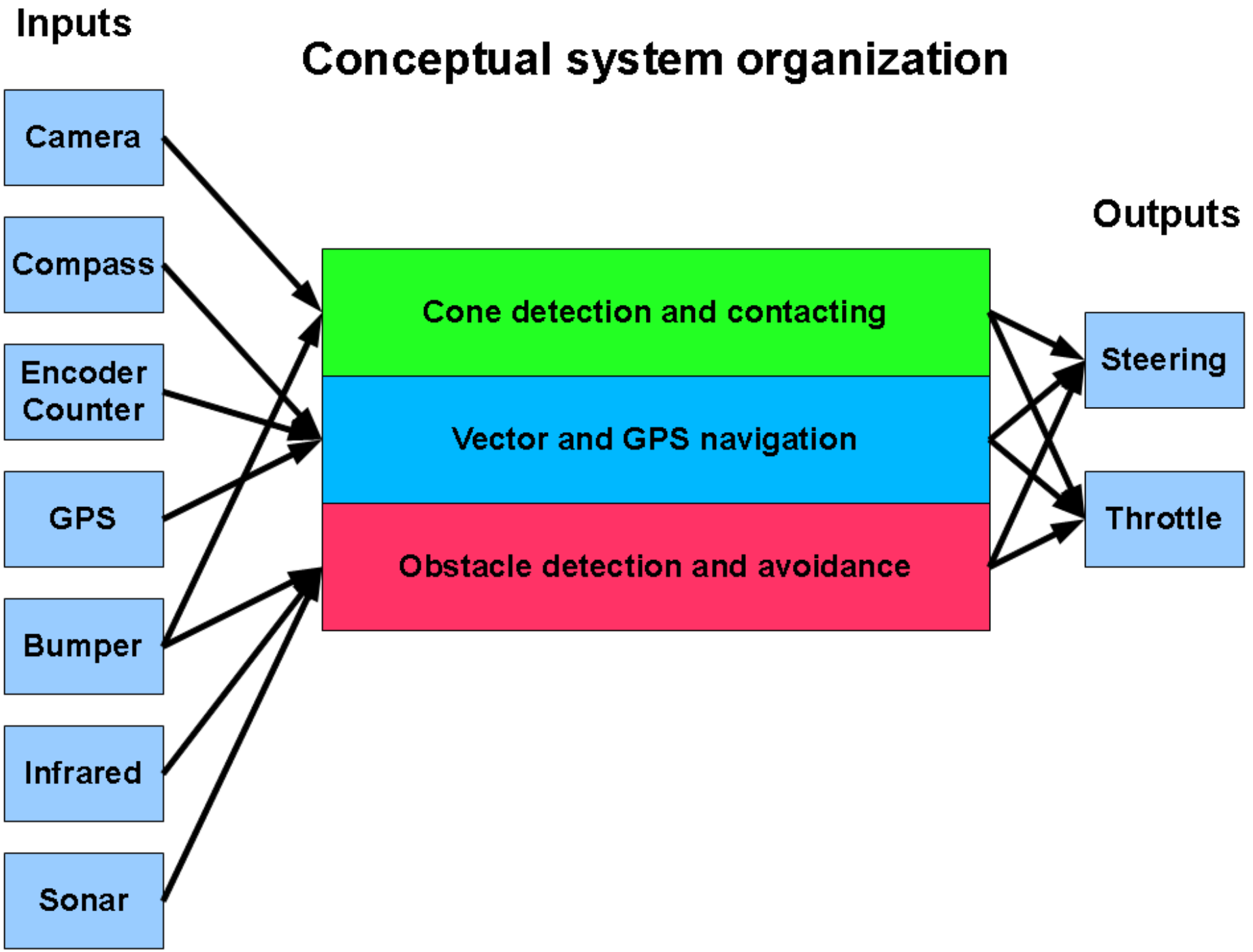
Inputs
Conceptual system organization
Camera
Compass
Encoder Counter
GPS
Bumper
Infrared
Sonar
Cone detection and contacting
Vector and GPS navigation
Obstacle detection and avoidance
Outputs
Steering
Throttle

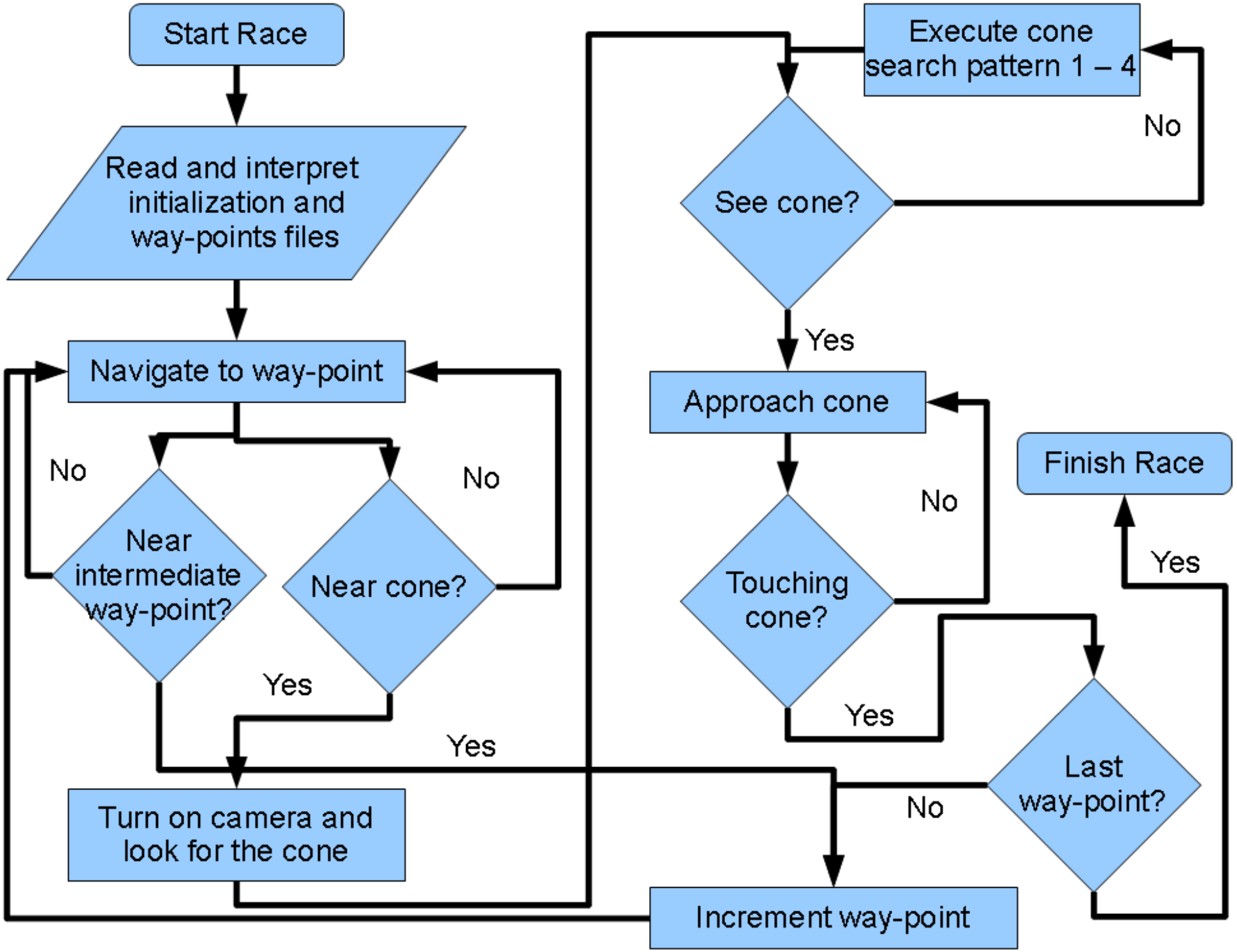
Start Race
Read and interpret initialization and way-points files
Navigate to way-point
No
Near intermediate way-point?
No
Near cone?
Yes
Yes
Turn on camera and look for the cone
Execute cone search pattern 1 – 4
No
See cone?
Yes
Approach cone
No
Touching cone?
Yes
Last way-point?
No
Yes
Finish Race
Increment way-point

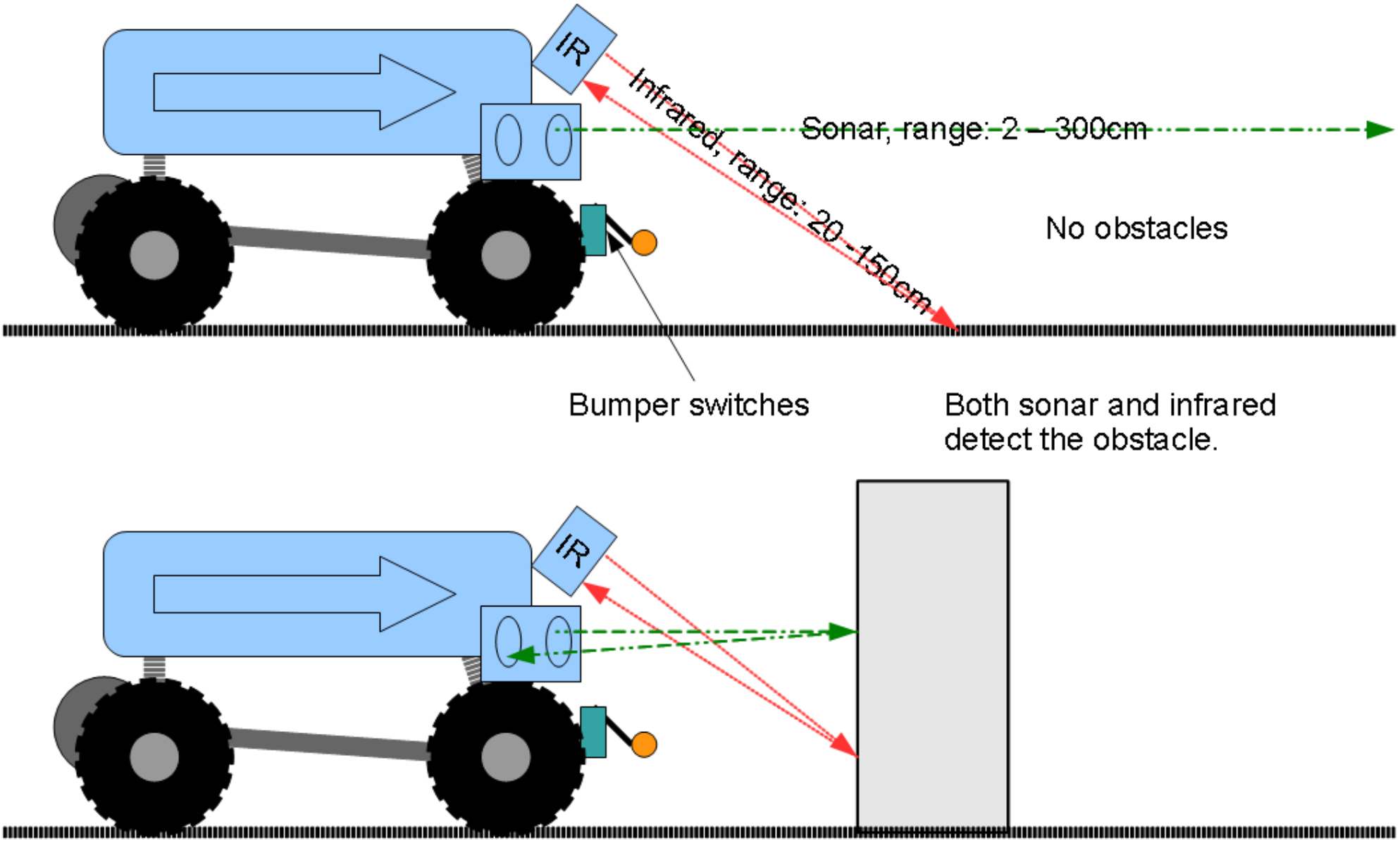
IR
Infrared, range: 20 - 150cm
Sonar, range: 2 – 300cm
No obstacles
Bumper switches
Both sonar and infrared
detect the obstacle.
IR

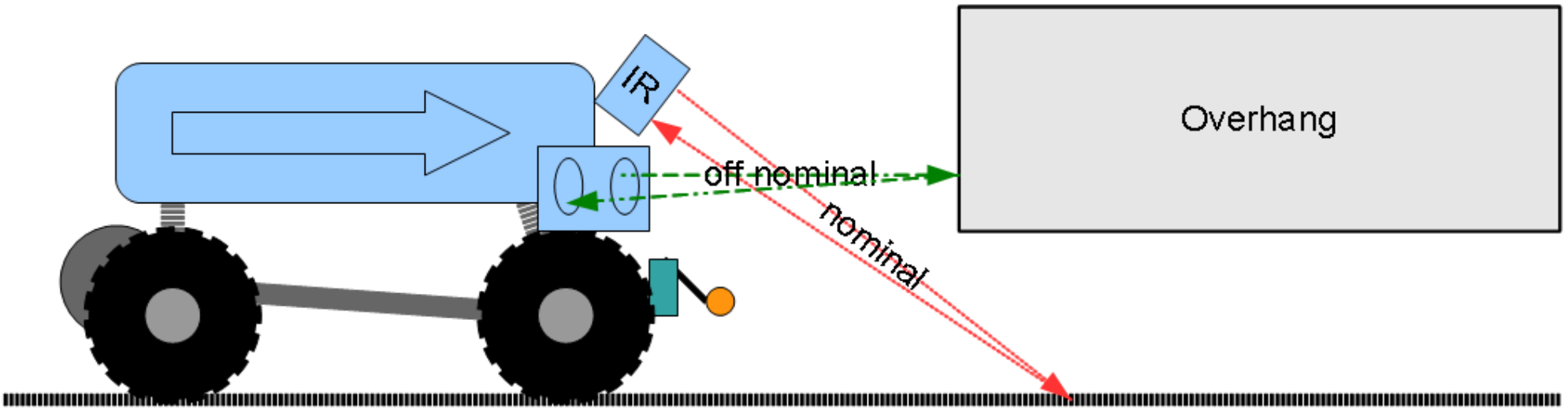

Far range sonar detection

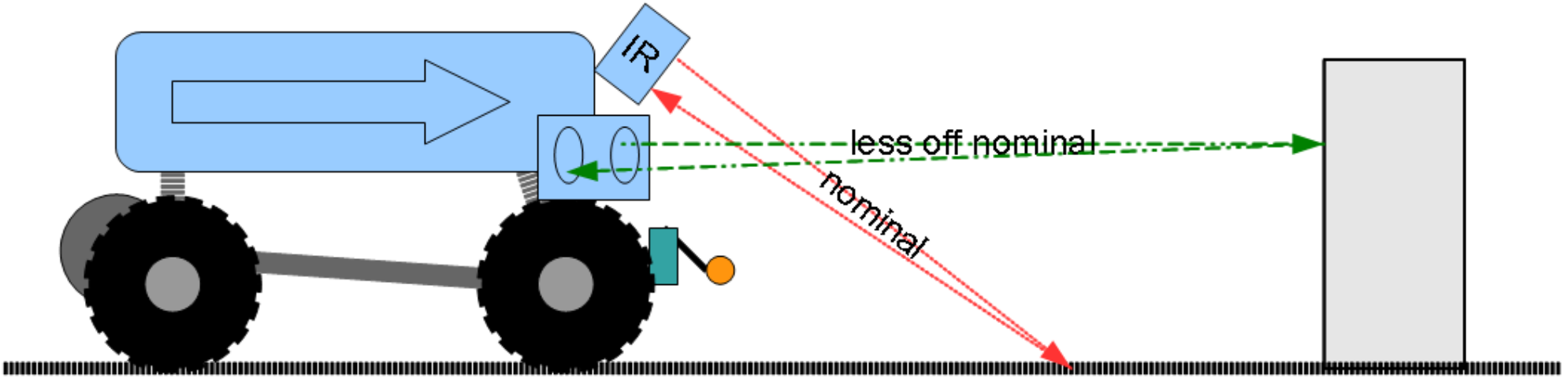

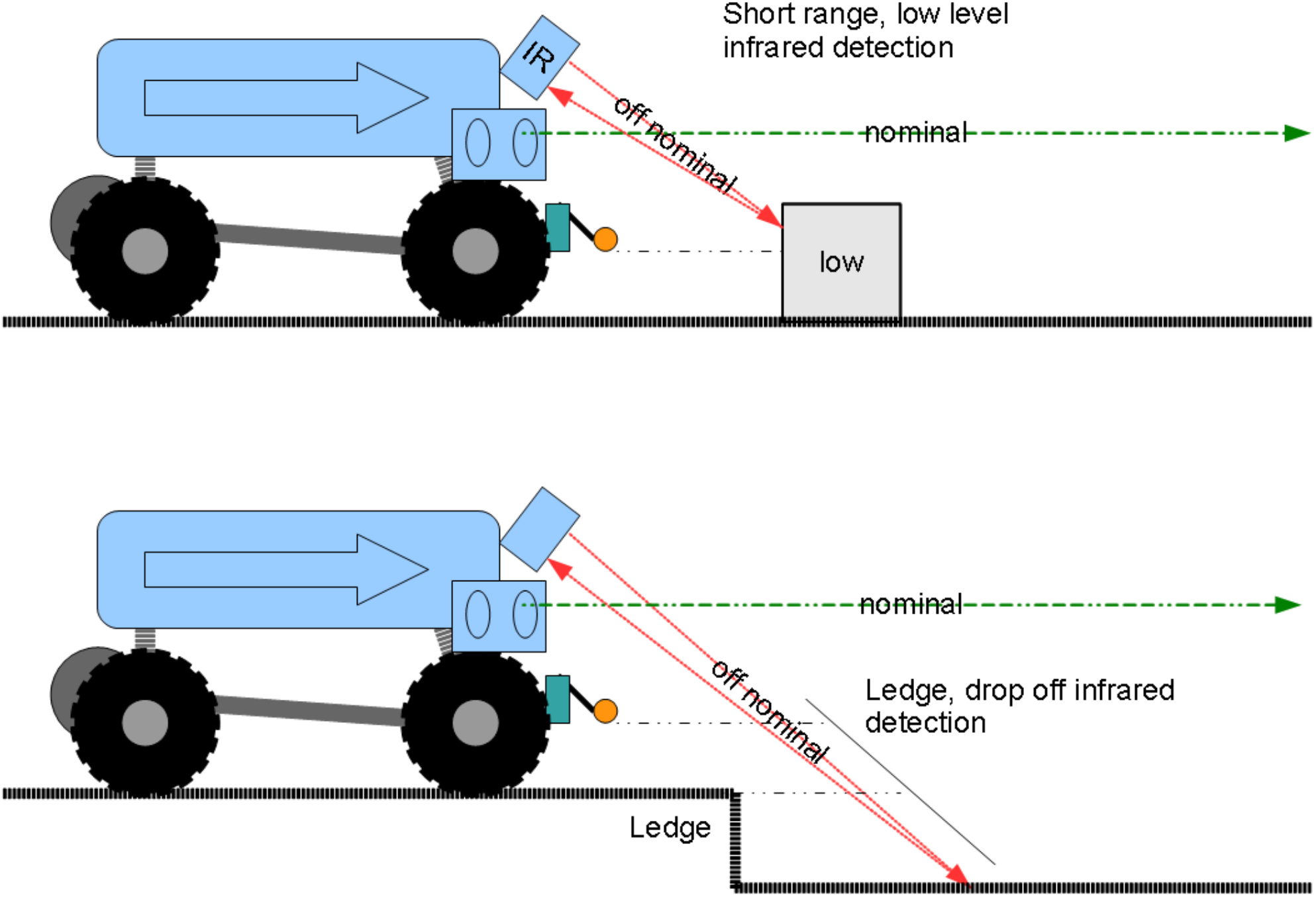
Short range, low level
infrared detection
IR
off nominal
nominal
low
nominal
off nominal
Ledge, drop off infrared
detection
Ledge

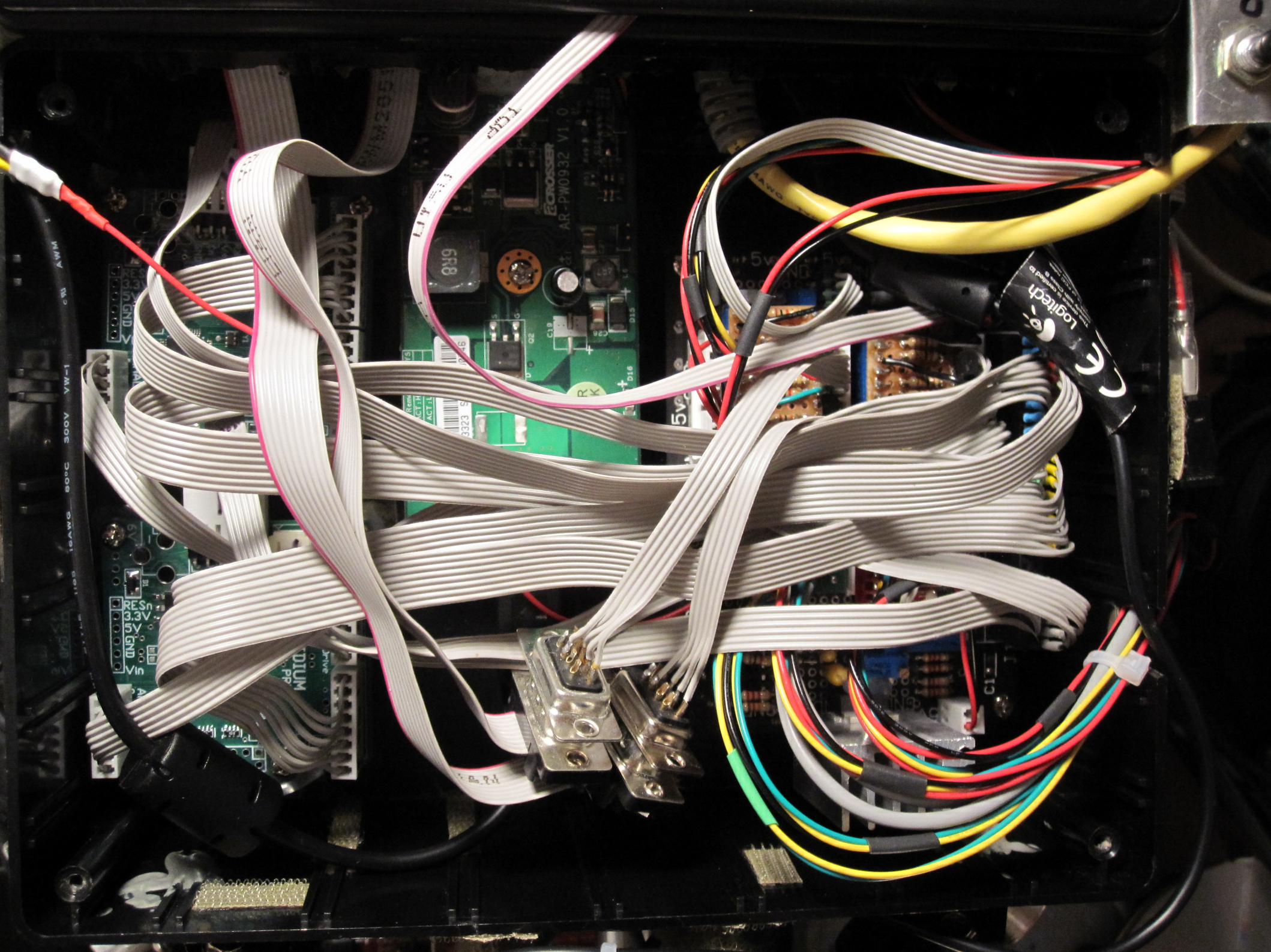
RESn
3.3V
5V
GND
Vin
Logitech

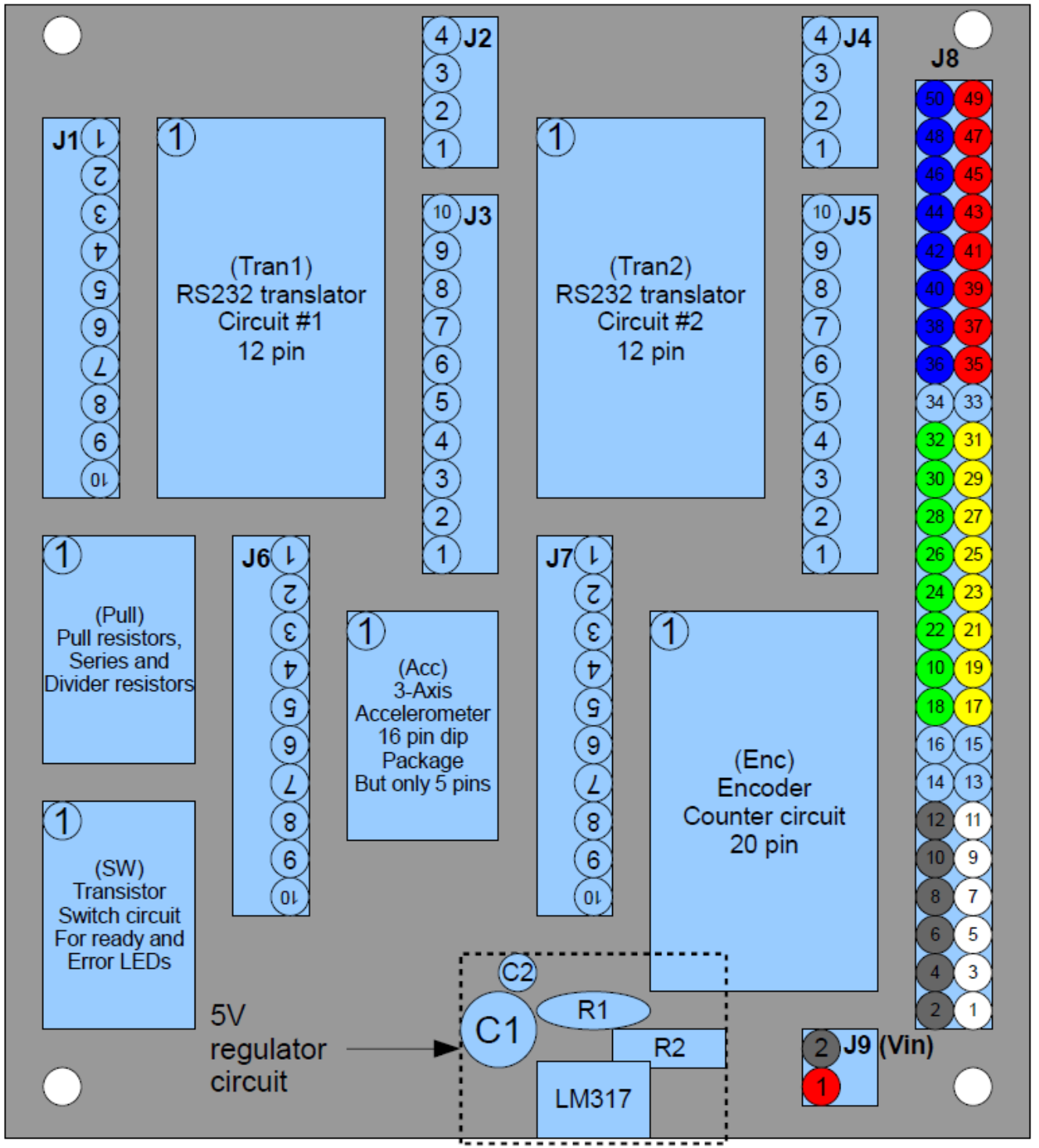
J1
J2
J3
J4
J5
J6
J7
J8
J9 (Vin)
(Tran1)
RS232 translator
Circuit #1
12 pin
(Tran2)
RS232 translator
Circuit #2
12 pin
(Pull)
Pull resistors,
Series and
Divider resistors
(Acc)
3-Axis
Accelerometer
16 pin dip
Package
But only 5 pins
(Enc)
Encoder
Counter circuit
20 pin
(SW)
Transistor
Switch circuit
For ready and
Error LEDs
5V
regulator
circuit
C1
C2
R1
R2
LM317

5v
GND
5v
GND
5v
5v
GND
5v
GND
5v
GND
5v
GND
5v
GND
5v
GND
74600
205 N
C1
C2
J1

System Controller Battery Voltage Divider

V Out = (R2/(R1+R2)) * V In

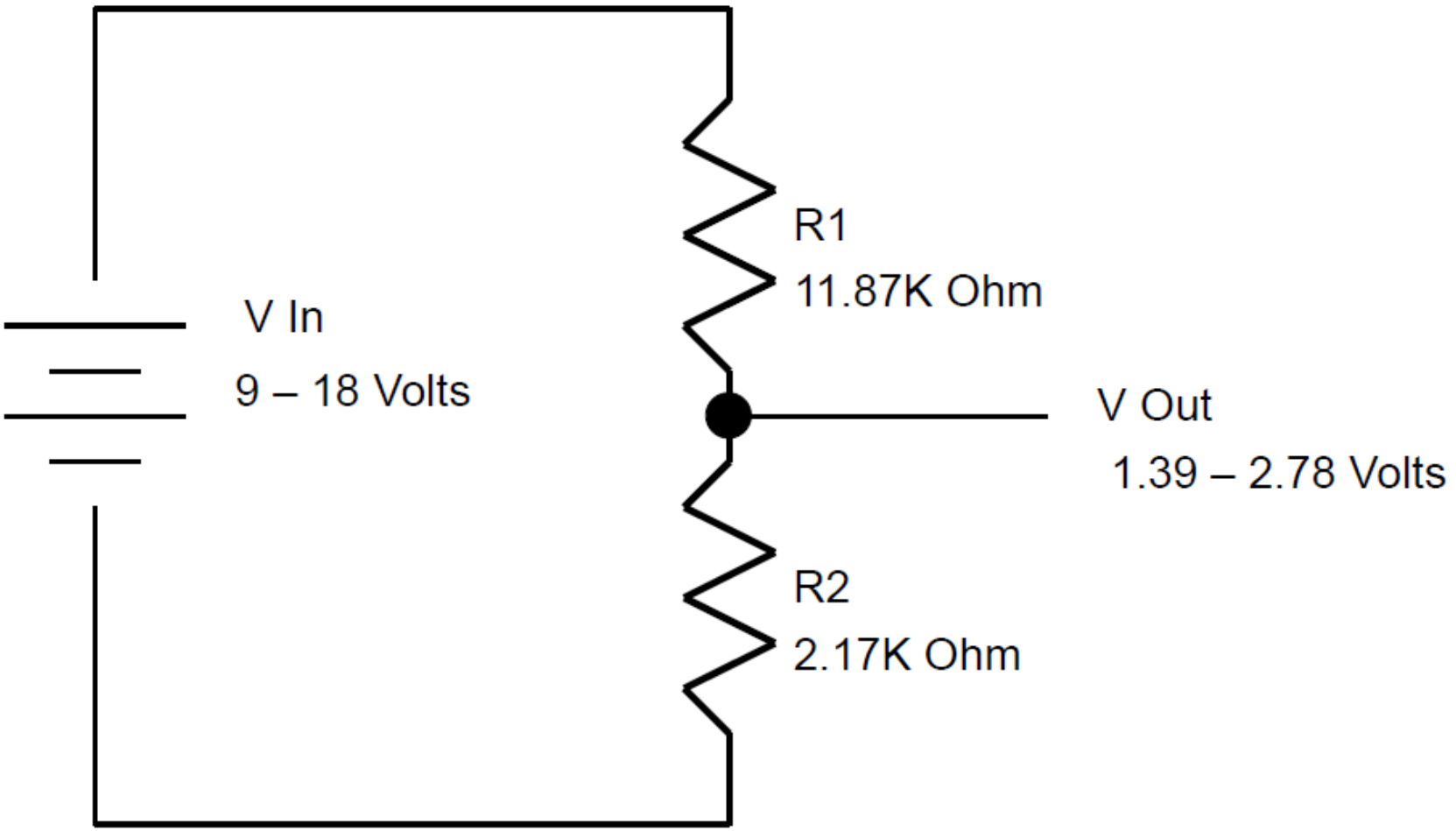

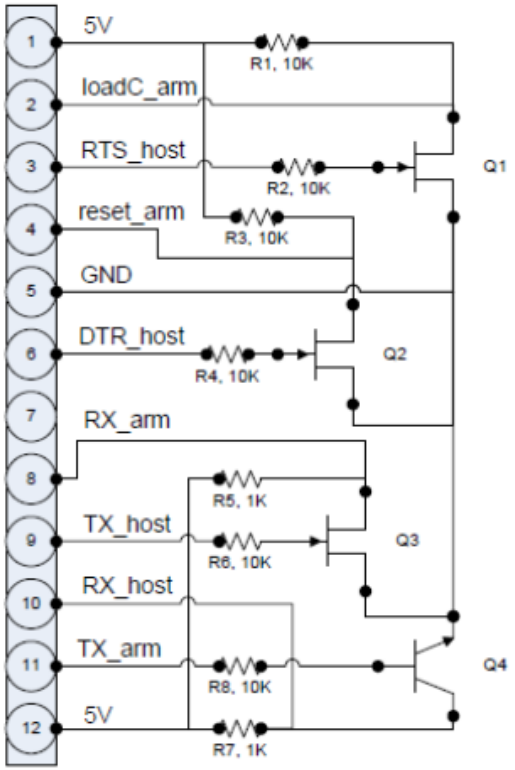
5V
loadC_arm
RTS_host
reset_arm
GND
DTR_host
RX_arm
TX_host
RX_host
TX_arm
5V
R1, 10K
R2, 10K
R3, 10K
R4, 10K
R5, 1K
R6, 10K
R8, 10K
R7, 1K
Q1
Q2
Q3
Q4
1
2
3
4
5
6
7
8
9
10
11
12

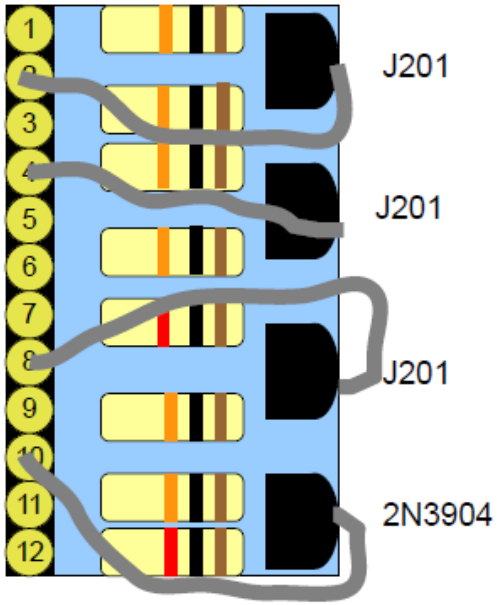
J201
J201
J201
2N3904
1
3
5
6
7
9
11
12

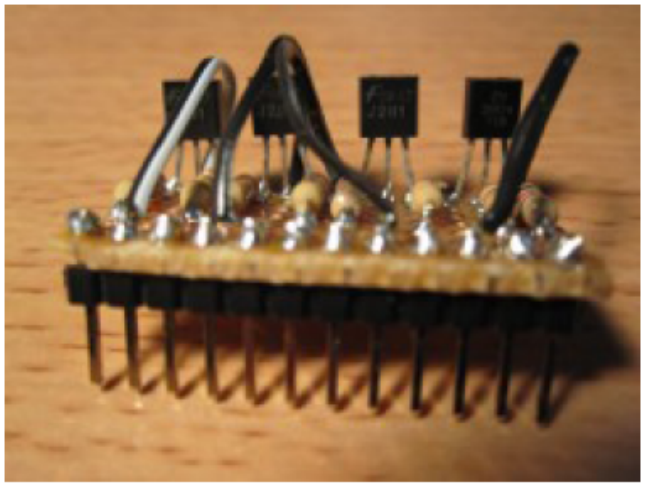

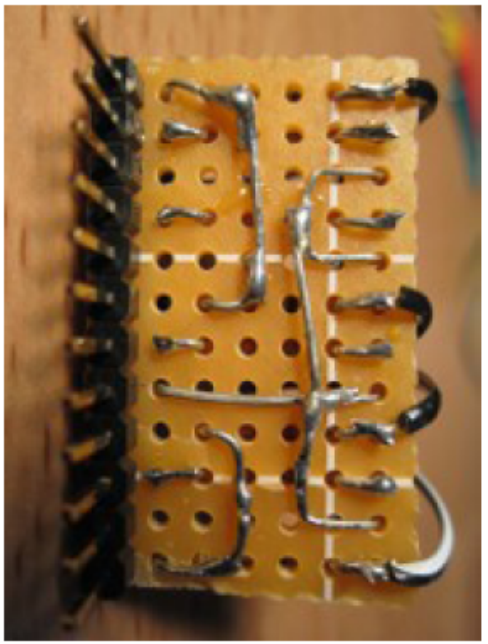

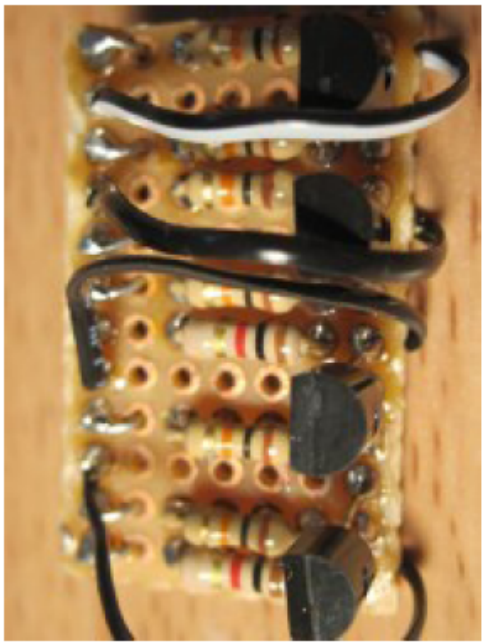

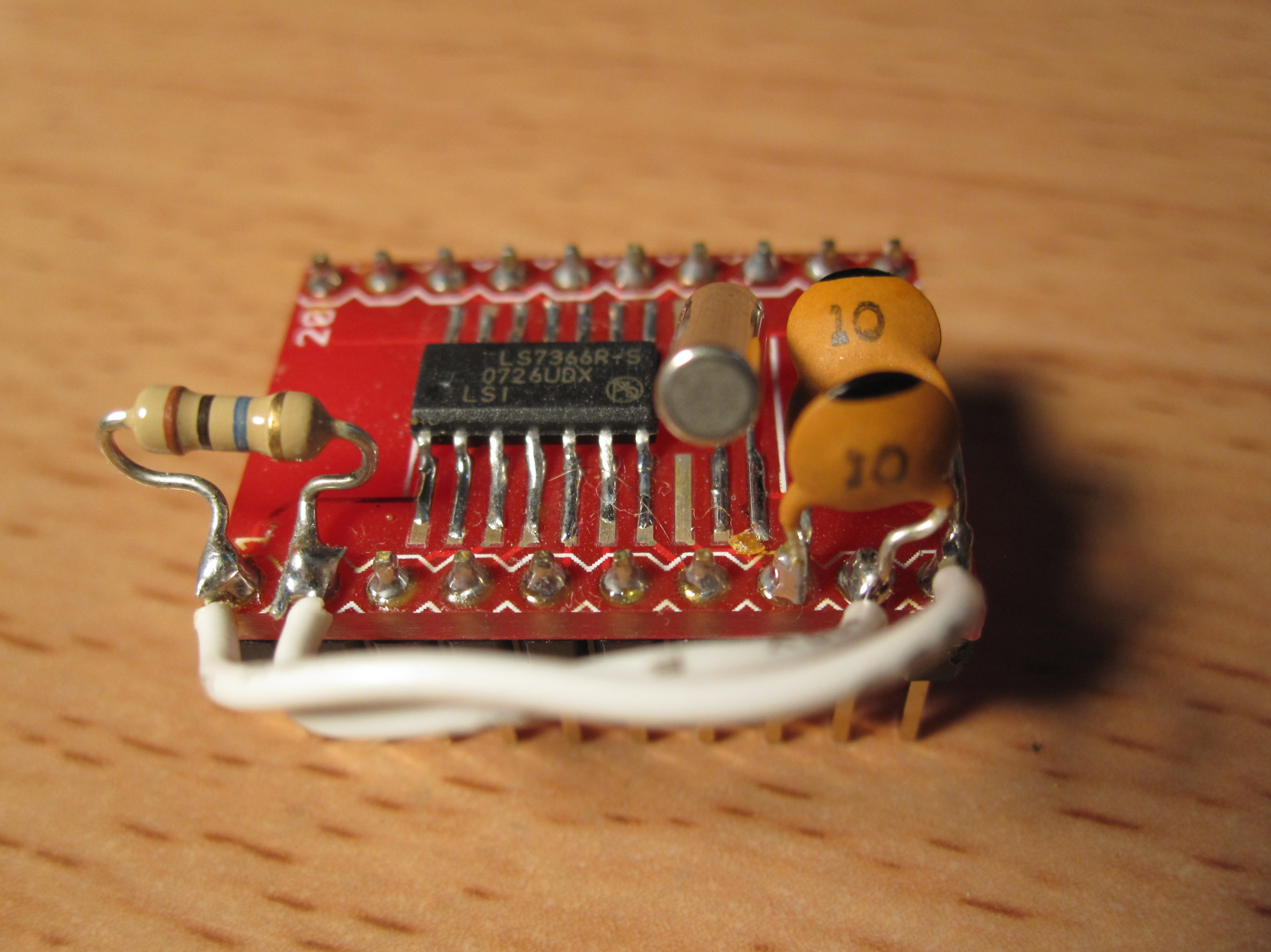
LS7366R-S
0726UDX
LSI
10
10

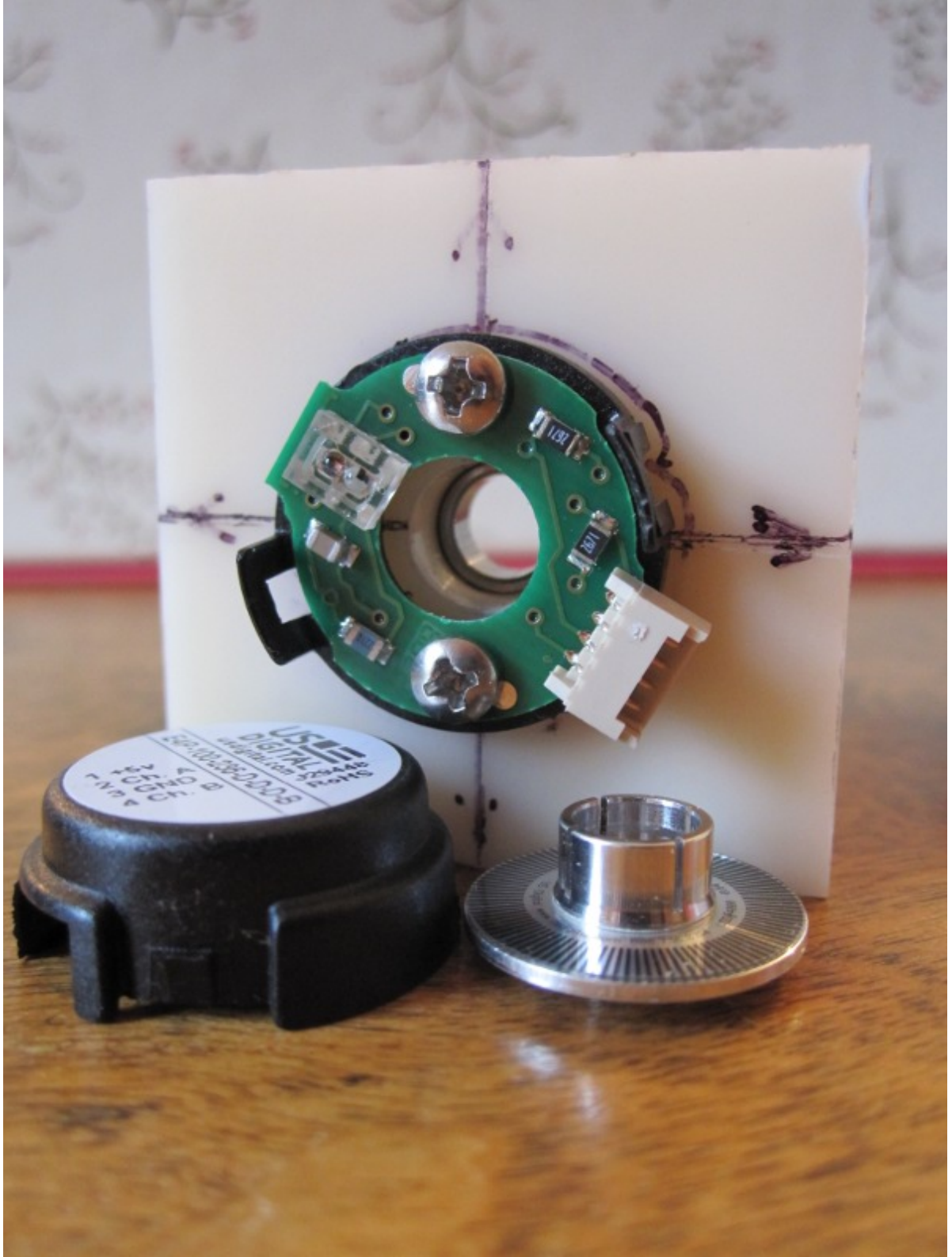

USDIGITAL

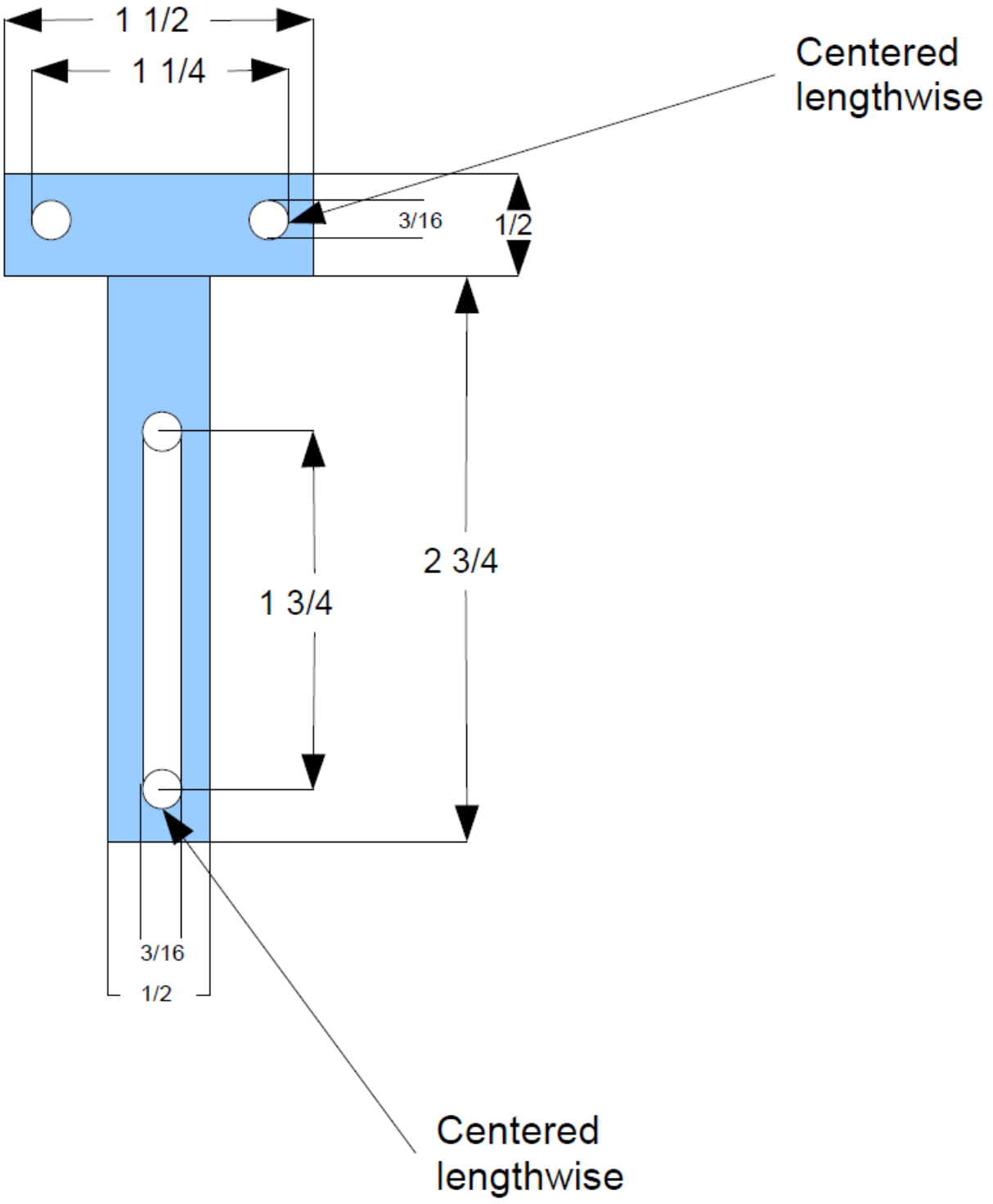
1 1/2
1 1/4
Centered
lengthwise
3/16
1/2
2 3/4
1 3/4
3/16
1/2
Centered
lengthwise

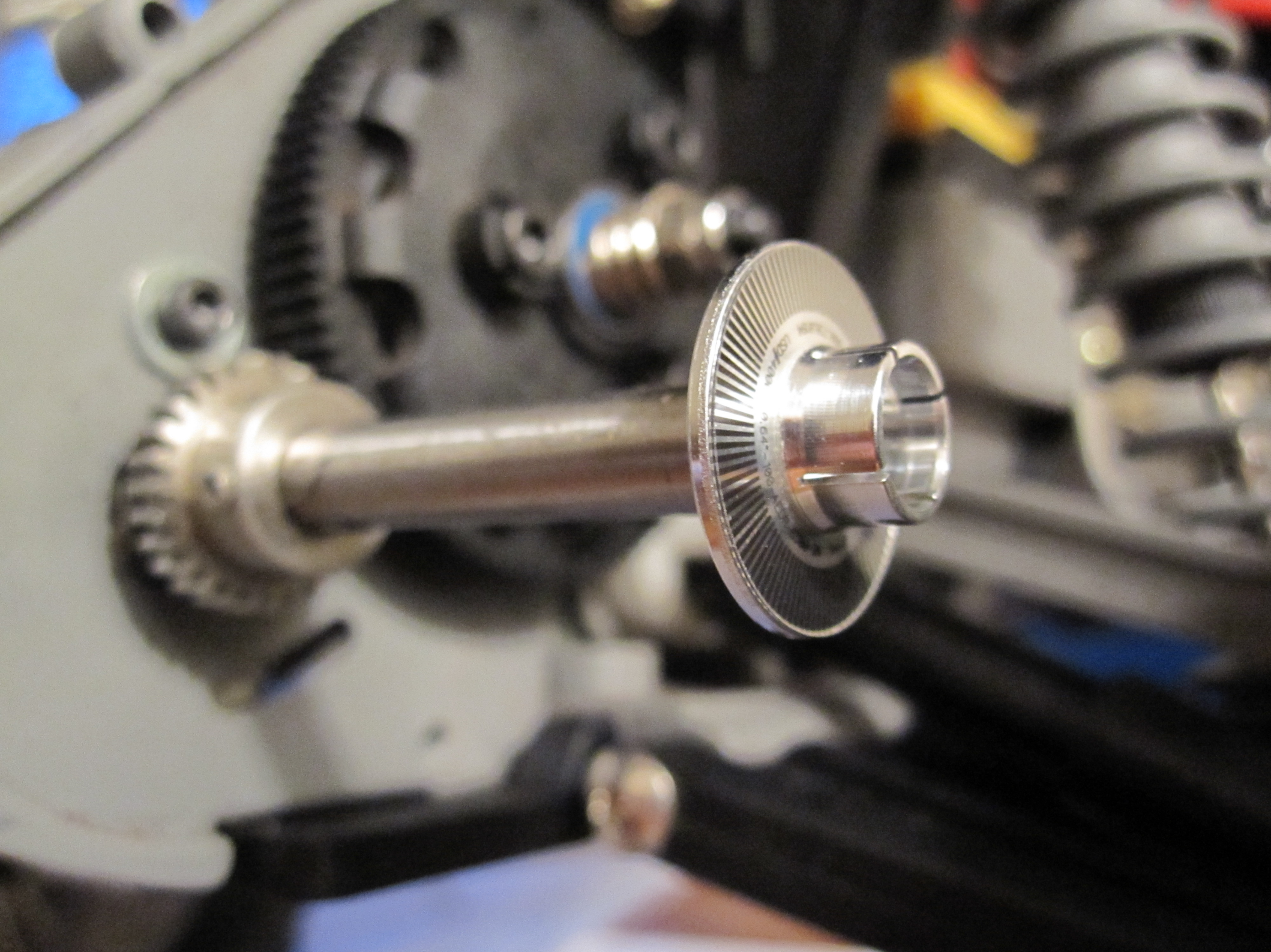

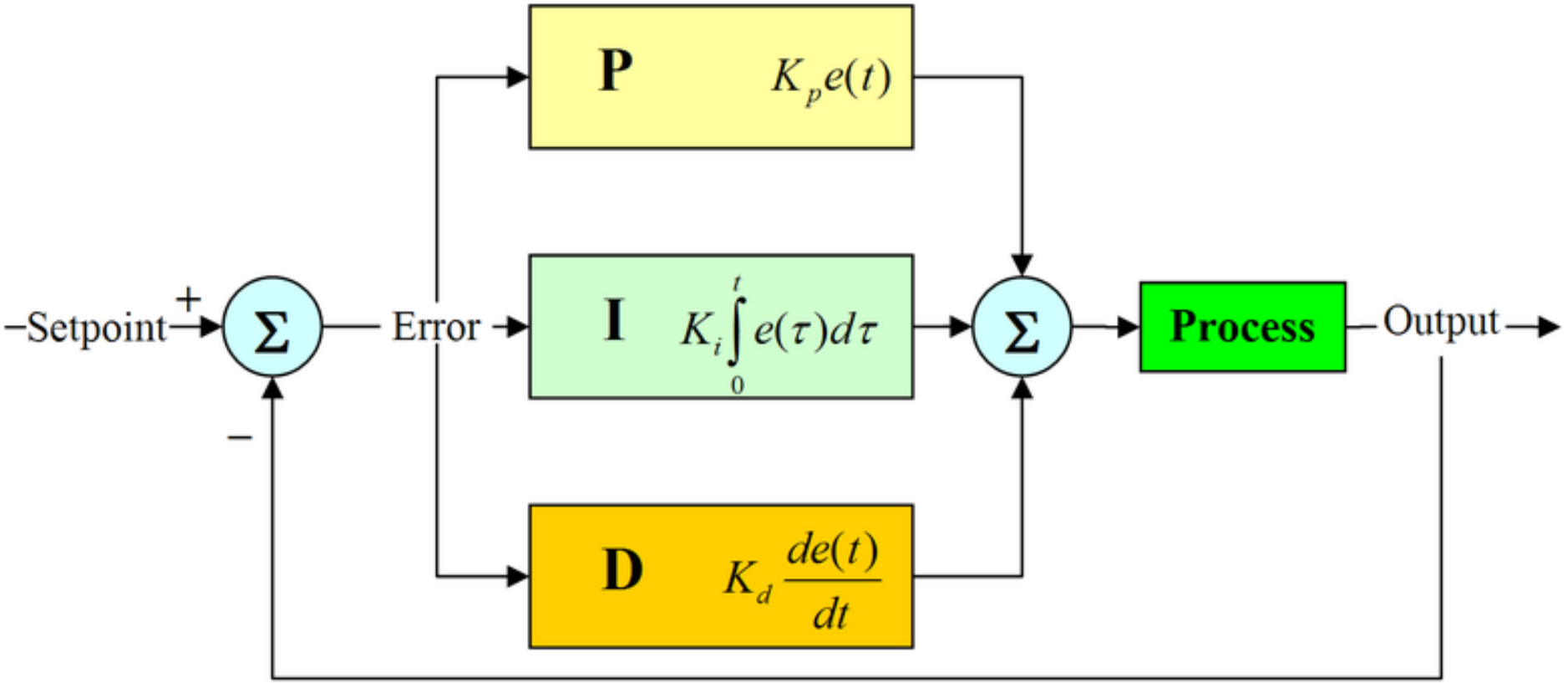
P
$K_p e(t)$
I
$K_i \int_0^t e(\tau)d\tau$
D
$K_d \frac{de(t)}{dt}$
Setpoint
+
−
Σ
Error
Σ
Process
Output

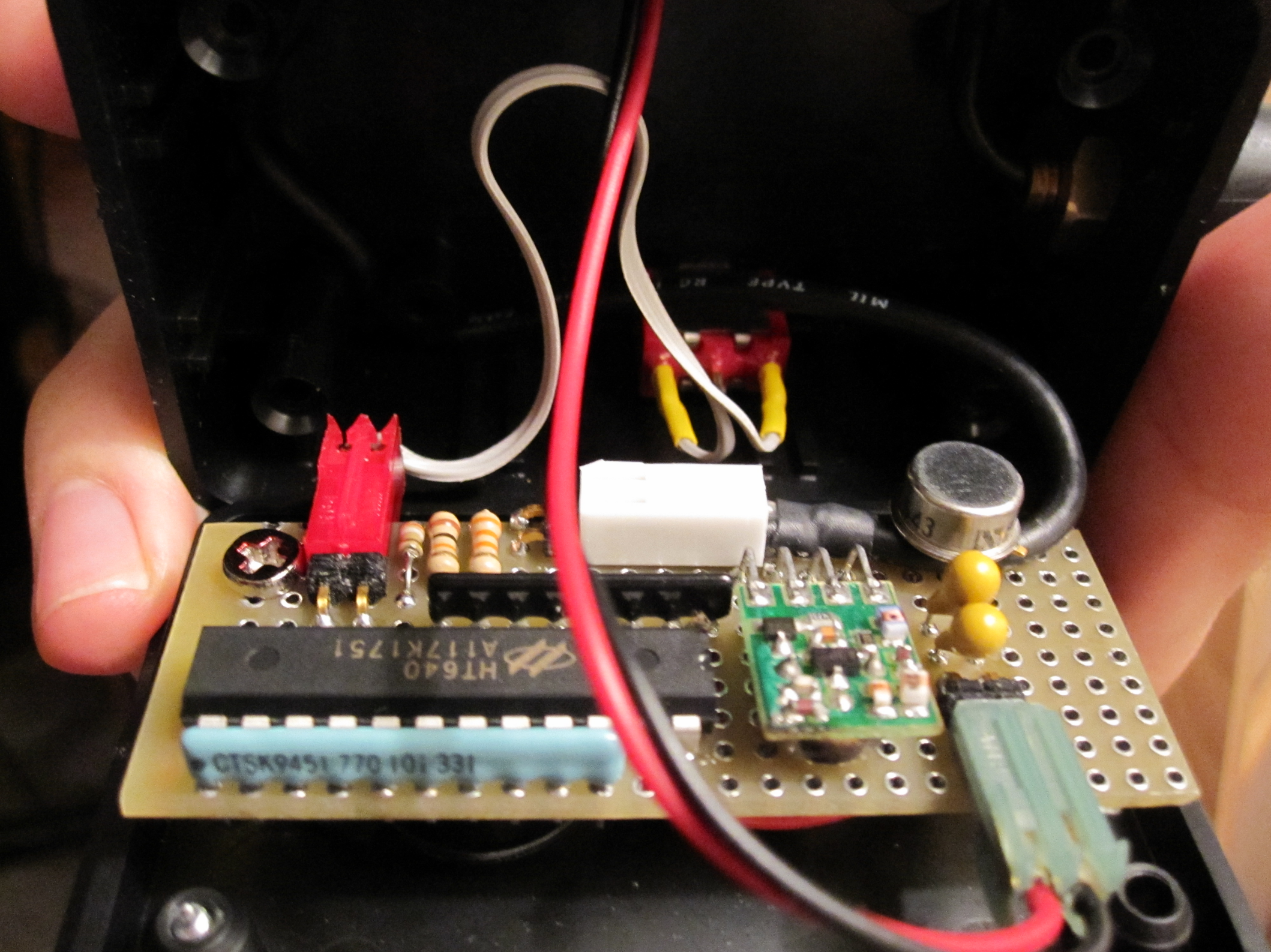
HT640
A117K1751